Recommended Main PCB for housing ICS...B100x98-V with ICS...C100x12 and TBUS8-...

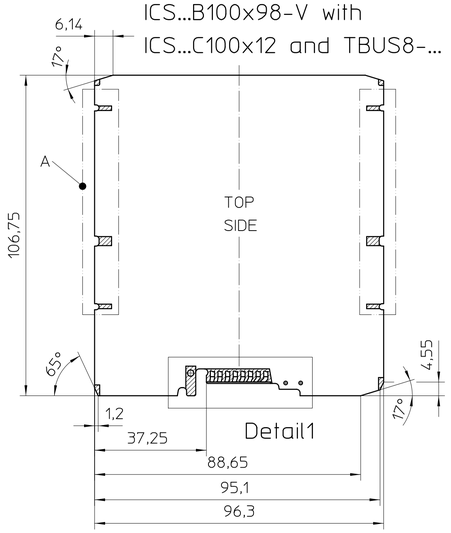

TOP SIDE assembly area: 9994mm2
BOTTEM SIDE assembly area: 9517mm2

Recommended Main PCB for housing ICS...B100x120-V with ICS...C100x12 and TBUS8-...

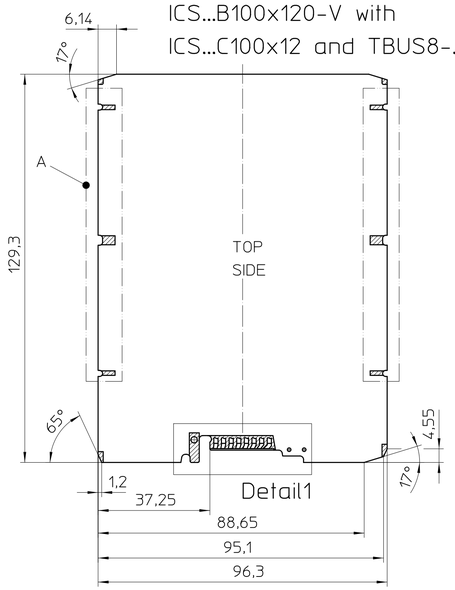

TOP SIDE assembly area: 12165mm2
BOTTEM SIDE assembly area: 11513mm2

Recommended Main PCB for housing ICS...B122x98-V with ICS...C122x12 and TBUS8-...

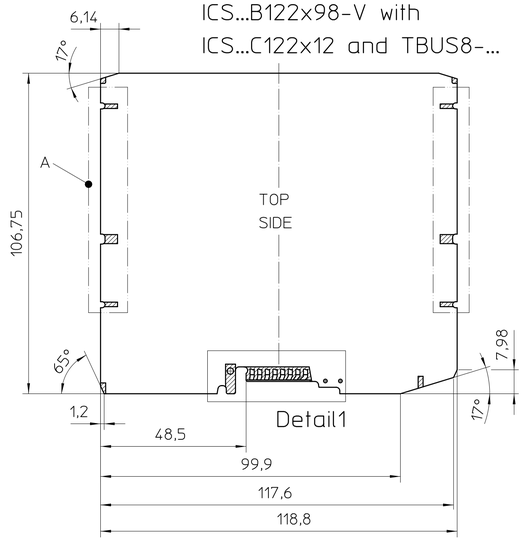

TOP SIDE assembly area: 12351mm2
BOTTEM SIDE assembly area: 11874mm2

Recommended Main PCB for housing ICS...B100x98-V with ICS...TL100x12 and TBUS8-...

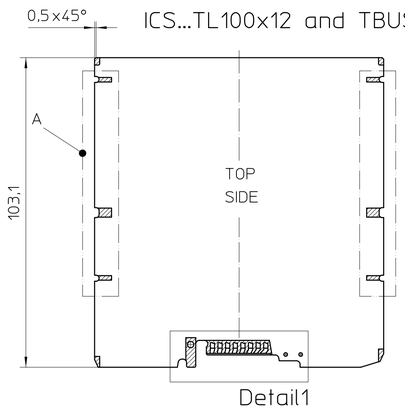

(Missing dimensions see recommended PCB for housing ICS...B100x98-V with ICS...C100x12)

TOP SIDE assembly area: 9651mm2
BOTTEM SIDE assembly area: 9190mm2

Recommended Main PCB for housing ICS...B100x120-V with ICS...TL100x12 and TBUS8-...

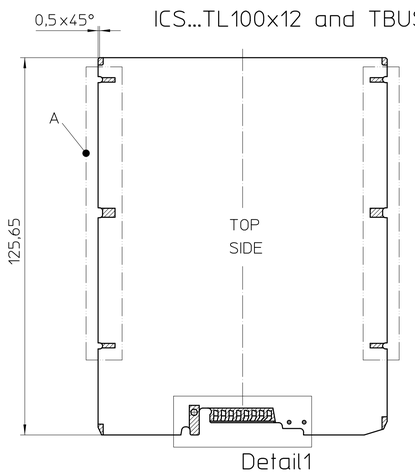

(Missing dimensions see recommended PCB for housing ICS...B100x120-V with ICS...C100x12)

TOP SIDE assembly area: 11823mm2
BOTTEM SIDE assembly area: 11186mm2

Recommended Main PCB for housing ICS...B122x98-V with ICS...TL122x12 and TBUS8-...

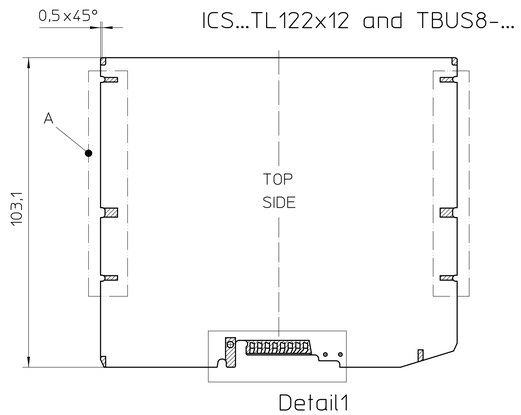

(Missing dimensions see recommended PCB for housing ICS...B122x98-V with ICS...C122x12)

TOP SIDE assembly area: 11925mm2
BOTTEM SIDE assembly area: 11463mm2

Detail1
2:1

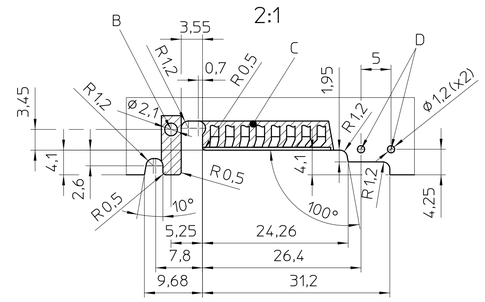

General Information:
- Recommended PCB
- Simplified representation
- Document excluded from change process
- CAD data see download-center on www.phoenixcontact.com
- Units are in millimeters [mm] and degrees [°]
- Tolerances apply in a normal climate according to DIN EN ISO 291-23/50-2
- Tolerances for PCB:
  dimensions <=30: ±0,10 / R±0,2 / ±1°
  dimensions > 30: ±0,15 / R±0,2 / ±1°
  symmetry: 0,2
- Thickness PCB: t=1,6±0,2
- Restricted area, no components

Additional Information
A) Variable area for connection technology or filler ICS...-F...
B) Hole for snap fit
C) Area for TBUS-...-PPPP....
   Additional information see download-center on www.phoenixcontact.com
D) Hole for ICS-FE-CONTACT

DIN A1	document-No. / RI 01207853 /04	date 12.06.2025	scale 1:1
PHOENIX CONTACT	ident-No. 1076893	document-type TECDOC 2D_PCB-Outline	
page 1 of 1	description ICS50-B100X98-V-V-9005		

Transfer or duplication of this document as well as the utilisation or communication of its content are not permitted unless express consent is granted. Violators are liable for damages. All rights reserved in case of patent, utility model or design patent registrations.

Weitergabe sowie Vervielfältigung dieses Dokuments, Verwertung und Mitteilung seines Inhalts sind verboten, soweit nicht ausdrücklich gestattet. Zuwiderhandlungen verpflichten zu Schadenersatz. Alle Rechte für den Fall der Patent-, Gebrauchsmuster- oder Designeintragung vorbehalten.